LSC350S3-6

Powered by Cummins

60HZ

Water-cooled

Three Phase

Diesel

Model		LSC350S3-6
Standby Power	KVA	**350**
	KW	**280**
Prime Power	KVA	**312**
	KW	**250**
Frequency	Hz	**60**
Voltage	V	**208/416**
Rated speed	rpm	**1800**

Cummins has distributors in 137 countries and regions, 5000 service networks spread all over the world. As the largest foreign investor of Chinese engine manufacturing industry, Cummins own Chongqing Cummins facility (producing M, N, and K series diesel engine) and Dongfeng Cummins facility (producing B, C, and L series diesel engine). Lees is the OEM partner of Cummins engine.

- **Performance**---Wider power ranges mean greater versatility for use in more applications: commercial, institutional, industrial, utilities, communications, government and more.
- **Lower operating and maintenance costs---**An increase in oil change intervals, longer life of components, longer top-end as well as full-overhaul periods, and reduced fuel consumption result in lower operating and maintenance costs..
- **Easy operation**---Each generator set is equipped with a baseframe-mounted control cabinet, together with Deep Sea 7320 controller as standard,and integral circuit breaker, ensuring a dependable and user-friendly operating system.
- **Improved serviceability**---Every Lees components was designed with serviceability in mind, resulting in simple, robust components that makes servicing fast and easy. The entire engine is built with internationally available tools and hardware.

Cummins engine → Model: NTA855-G1

Cummins NTA855-G1: In-line, 6 Cylinder, 4 Cycle, Diesel Engine	
Bore X Stroke (mm)	140x152
Displacement (L)	14
Compression ratio	14.5:1
Rated RPM	1800 rpm
Max. Standby power at rated RPM	317KW/431HP
Cylinder arrangement	6 in line
Air intake system	Turbo, water/air cooling
Fuel system	PT type fuel pump
Governor type	Electrical

Fuel System	
100% (prime power) load	219 g/kw.h
75% (prime power) load	221 g/kw.h
50% (prime power) load	236 g/kw.h

Oil System	
Total oil capacity (L)	36.7
Oil consumption (L/h)	≤4
Engine oil tank capacity (L)	36
Oil pressure at rated speed (kPa)	241-345

Exhaust System	
Maximum allowable back pressure (kPa)	10
Exhaust temperature (℃)	543
Exhaust gas flow (L/s)	1253

Cooling System	
Coolant capacity (L)	85
Thermostat (℃)	82-93
Max. coolant temperature (℃)	104

Air intake System	
Max. intake restriction (kPa)	6.25
Consumption (L/s)	463
Air flow (L/s)	9808

Alternator

Main features:

- 12 wire reconnectable stator/terminal arrangement
- Easy access for installation and maintenance
- 2/3 pitch winding as standard, to avoid excessive neutral currents
- Class H insulation with severe environmental protection as standard
- Built to conform with all leading industrial and marine standards
- 460 AVR as standard with 1.5% regulation and 2 phase sensing
- IP23 as standard

Alternator specifications	
Control system	Self excited
A.V.R.	AS440
Voltage regulation	±1.0%
Insulation system	Class H
Protection	IP23
Stator winding	Double layer lap
Winding pitch	2/3
Winding leads	12
Stator wdg. resistance	0.0124 Ohms per phase at 22℃series star connected
Rotor wdg. resistance	1.05 Ohms at 22℃
Excited stator resistance	18 Ohms at 22℃
Excited rotor resistance	0.068 Ohms per phase at 22℃
Waveform distortion	No load ＜1.5% non-distorting balanced linear load ＜5.0%
Maximum overspeed	2250 Rev/Min
Bearing drive end	-
Bearing non-drive end	BALL.6314
Packing crate size	123X67X103 (cm)
Telephone interference	THF＜50 (60Hz)
Cooling air	0.99m3/sec

Alternator options	
Stamford	S4L1D-D41
Leroy Somer	TAL A46 G
Lees	LA4D

Deepsea control module ➔ Model: 6020

The DSE6020 is an Auto Mains (Utility) Failure Control Module suitable for a wide variety of single, diesel or gas, gen-set applications.

Monitoring an extensive number of engine parameters, the modules will display warnings, shutdown and engine status information on the back-lit LCD screen, illuminated LEDs, remote PC and via SMS test alerts (with external modem).

The DSE6020 will also monitor the mains (utility) supply. The modules include USB, RS232 and RS485 ports as well as dedicated DSENet terminals for system expansion.

Key Features:

- 4-line back-lit LCD text display
- Five key menu navigation
- Front panel editing with PIN protection
- LED and LCD alarm indication
- Customisable status screens
- Power save mode
- Support for up to three remote display units
- 9 configurable inputs
- 8 configurable outputs
- Flexible sender inputs
- Configurable timers and alarms
- 3 configurable maintenance alarms
- Multiple date and time scheduler
- Configurable event log (250)
- Control logic facilities
- Easy access diagnostic page
- CAN and Magnetic Pick-up / Alt. Sensing
- Fuel usage monitor and low fuel alarms
- Charger alternator failure alarm
- Manual speed control
- Manual fuel pump control
- Engine exerciser
- “Protections disabled” feature
- kW overload protection
- Power monitoring
- Load switching (load shedding and dummy load outputs)
- Automatic load transfer
- Unbalanced load protection
- Independent Earth Fault trip
- USB connectivity
- Backed up real time clock
- Fully configurable via DSE Configurable Suite PC software
- Configurable display languages
- Remote SCADA monitoring via DSE Configuration Suite PC software
- User selectable RS232 and RS485 communications
- SMS Messaging (additional external modem required)
- Additional display screens to help with modem diagnostics
- DSENet expansion compatible
- Integral PLC editor

Overview dimension & Sound levels

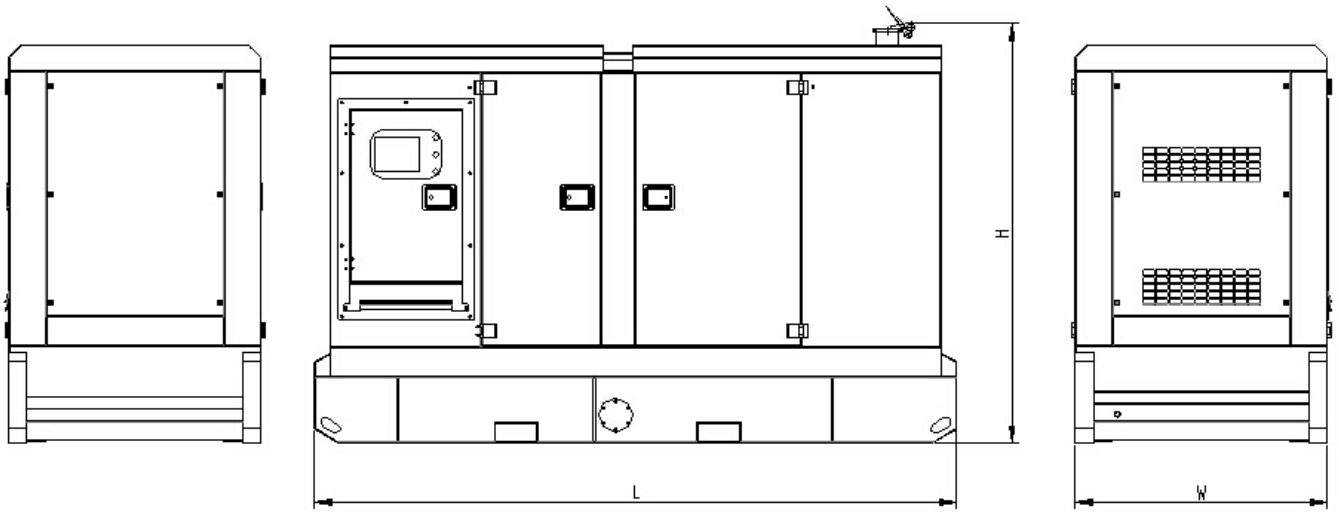

LSC350S3-6 (Silent type)				
Configuration	L= Length (mm)	W= Width (mm)	H= Height (mm)	Weight (kg)
Enclosed set	3620	1232	2000	3690

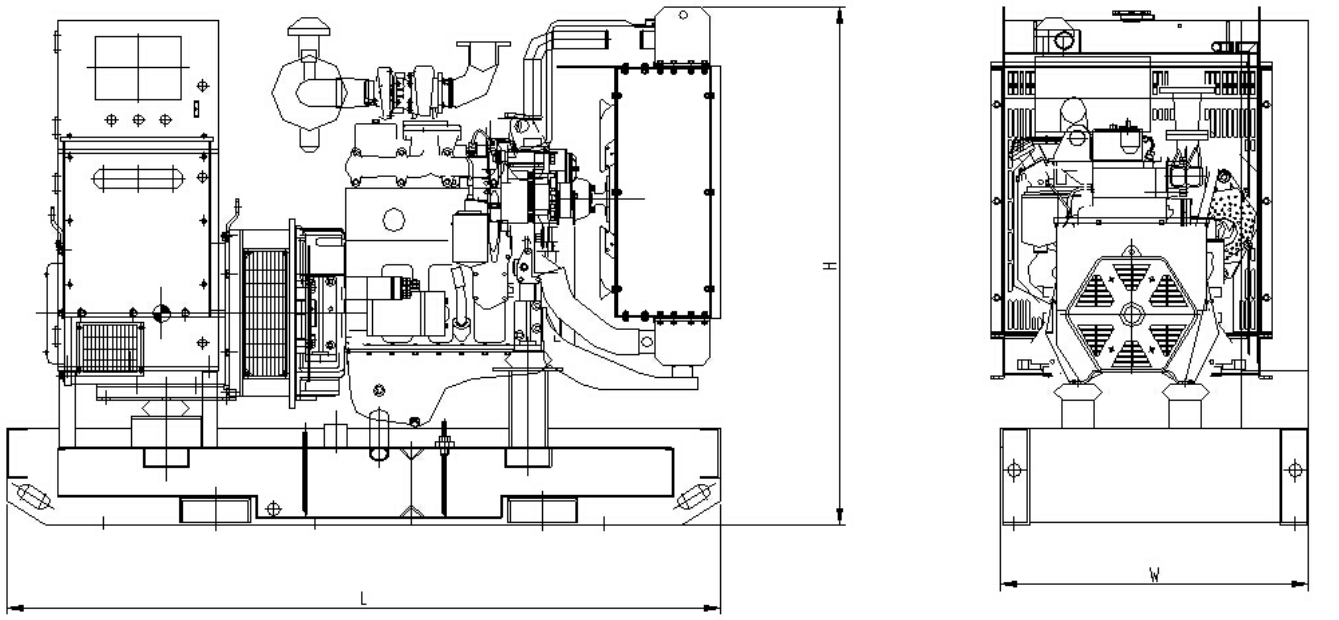

LSC350E3-6 (Open type)				
Configuration	L= Length (mm)	W= Width (mm)	H= Height(mm)	Weight (kg)
Open set	2500	960	1850	3130

Generating Sets Standard and Optional Features

Engine:

- 4-stroke, water-cooled diesel engine
- Standard air filter
- Standard fuel filter
- Standard oil filter
- Oil temperature sensor
- Low coolant level sensor
- 24V electrical system
- Radiator with blowing fan
- Industrial silence
- **Fuel water separator (optional)**
- **Water jacket heater (optional)**

Alternator:

- Class H insulation
- IP23 Protection
- Automatic Voltage Regulator (AVR)
- PMG excitation
- Single bearing alternator

Electrical system:

- DSE 6020 control module
- Maintenance-free and anti-explosion battery
- Standard breaker
- **ABB breaker (optional)**
- **ATS (optional)**
- **Battery charger (optional)**
- **GMS monitoring (optional)**

Packing:

- Engine manual
- Alternator manual
- Gensets operation and maintenance manual
- Tool kit

Baseframe:

- Forklift pockets
- Pulling slots
- Earth wire protection
- Built-in anti vibration mountings
- Fuel outlet value
- Standard 8 hours fuel tank
- **Enlarged 24 hours fuel tank (optional)**
- **Separated fuel tank (optional)**

Canopy:

- Weatherproof & sound-attenated canopy
- Sound-absorbing material
- Lifting lug
- Emergency stop button
- Inside silencer
- **Trailer (optional)**

Contact your distributor / dealer for more information

WUXI LEES POWER COMPANY LIMITED
NO.312 Highway, Luoshe Town, Wuxi, China, 214000
Tel: 86-510-85166446
Fax: 86-510-85168446
Web:www.leespower.com
Email: lees@leespower.com

2019 by Wuxi Lees Power Co., Ltd. All right reserved